Rebuilding the HEEPidermis Bioimpedance Chain and Testing Ten Extensions in Simulation

Nithin Purushothama*

nithinpurushothama@gmail.com • nithinpuru.com

November 2026

Abstract

HEEPidermis [1] puts a complete bioimpedance (BioZ) chain on one RISC-V system-on-chip: two 8-bit current DACs (iDACs), two VCO-based ADCs with non-reset counters, an event-driven level-crossing block and an X-HEEP microcontroller, with post-layout results of 64 µW for skin conductance (GSR) and 72 µW for impedance. This report rebuilds the chain at block level, grounds its two analog blocks in transistor-level SKY130 simulation with per-device mismatch (a 31-stage current-starved ring VCO and an 8-bit iDAC over 40 Monte Carlo chips), and uses the model to test ten extensions against the published flows.

The main results are:

- **Synchronous lock-in**: sampling the counters on the iDAC timer gives impedance phase within 0.009 deg in one 0.5 s capture, against 3.59 deg for the paper's two-measurement method in 1 s.
- **VCO self-calibration** through the on-chip reference resistor keeps GSR error at 0.08 % over a wide window, so the CPU wakes 2 times per hour instead of 26.
- **Channel swapping** cancels the gain mismatch between the two channels: lock-in $|Z|$ error falls from 0.66 % to 0.04 %, and stepped-sine spectroscopy from 0.91 % to 0.05 % (median tone).
- **A degenerated V-to-I plus current-controlled oscillator** (SKY130) is 1.8 % nonlinear over a 0.4 V window against 14.2 % for the baseline VCO; with the paper's linear firmware and no lookup table, GSR error falls from 2.68 % to 0.20 %.
- **An impedance servo** holds the VCO within 3.1 mV of one point at 6.3 instead of 10.5 µW.
- **Background calibration**: the SKY130 VCO drifts by up to 1.87 %/°C; a two-point check against R_{ref} every 30 s cuts the resulting GSR error from 7.21 % to 0.36 %.

Two ideas did not win and are reported as such: a multisine capture, and binary excitation, which beats the stepped sine but not the stepped sine with channel swapping.

1 Introduction

1.1 Motivation

Bioimpedance measures how tissue resists and stores charge: inject a known current, measure the voltage. A DC current gives skin conductance, which tracks sweat and stress (GSR); a sine gives magnitude and phase, which track fluids, breathing and tissue state; a sweep over frequency gives impedance spectroscopy. Commercial BioZ front ends fix the waveform and frequency. HEEPidermis [1] instead lets a small RISC-V core program arbitrary currents and re-pick the operating point in real time, so one chip covers several use cases. It was taped out in TSMC 65 nm; all reported numbers are post-layout simulation.

1.2 Contributions

1. **A block-level rebuild** of the published BioZ chain and of both published measurement flows (Secs. 3 and 5).
2. **Transistor-level SKY130 blocks** with per-device mismatch: the ring VCO, the 8-bit iDAC (40 Monte Carlo chips), a linearised V-to-I plus CCO front end, and the VCO's temperature drift (Sec. 4).
3. **Ten extensions**, each run on the same model as the baseline (Sec. 6), including the negative results.

*Simulation code, SKY130 testbenches and data are available on request. Every number in this report is generated from the simulation output files, not typed by hand.

1.3 What this report is not

All results are simulation. SKY130 is not TSMC 65 nm: the shape of the SKY130 transfer curves is kept and mapped onto the paper's 408 mV to 800 mV and 36 kHz to 887 kHz range. Tissue is a Cole model with assumed values, and the GSR trace is synthetic.

2 The Published Architecture

Fig. 1 shows the chain. A 0.8 V LDO feeds two current paths: one through the skin, one through a known reference resistor R_{ref}. Each path has its own 8-bit iDAC sinking 0 to 10 µA in 40 nA steps, updated by a timer at up to 200 kHz, and its own VCO-ADC: a 31-tap ring oscillator whose frequency follows the node voltage and clocks a 26-bit counter that is never reset. Sampling and differencing the counter gives the average frequency in each window, with first-order noise shaping for free. A digital level-crossing (dLC) block watches the samples and wakes the CPU only when the signal leaves a window.

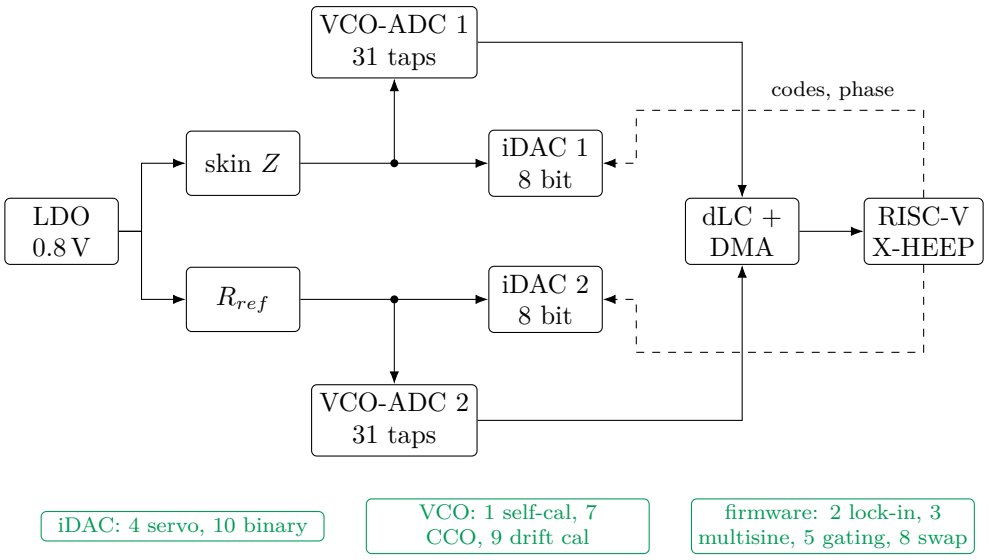

Figure 1: HEEPidermis BioZ chain [1] (black) and where each extension acts (green).

The two published flows.

- **GSR.** A constant current; the VCO is used only inside a narrow, nearly linear input window. When the dLC sees the node leave the window, the CPU wakes and re-centres the current.
- **Impedance.** The ADC is not synchronised to the iDAC, so phase cannot be read directly. The tissue and R_{ref} are driven with sines at a known phase offset, the two VCO-ADCs run pseudo-differentially, and two captures at two phase offsets are solved for magnitude and phase.

3 Methodology

- **Transistor level.** SKY130 `nfet_01v8/pfet_01v8` typical models [3] in ngspice [4]. The PDK's `vth0_slope` term was turned into an instance parameter so that every transistor gets its own Pelgrom threshold shift $\sigma_{\Delta V_{th}} = A_{VT}/\sqrt{WL}$ [2].
- **Block level.** The VCO uses the SPICE $f(V)$ shape with white frequency noise (0.2 % per cycle) and 1/32-cycle fine phase from the 31 taps. Each iDAC uses one Monte Carlo chip's bit currents and output-voltage sensitivity. Tissue is a Cole model ($R_0 = 100\,\text{k}\Omega$, $R_\infty = 20\,\text{k}\Omega$, 300 Hz corner, $\alpha = 0.8$), applied in the frequency domain; $R_{ref} = 50\,\text{k}\Omega$.
- **GSR.** A synthetic 30-minute conductance trace (tonic level plus phasic responses), 2 samples/s as in the paper.
- **Impedance.** 200 Hz, 2.56 µA DC plus 1.6 µA AC, counters read at 8 kHz; two VCO channels with 2 % gain mismatch and two Monte Carlo iDACs; 12 random chip pairs.

4 Transistor-Level Circuits in SKY130

4.1 Ring VCO and iDAC

VCO. 31 current-starved stages at 1.2 V, 40 fF per stage, starving devices driven by the input voltage. SKY130 thresholds are higher than 65 nm HVT, so the input window is 0.45 V to 0.85 V. Frequency runs from 4.2 to 859 kHz and power from 0.02 to 2.95 µW. The curve is exponential at the bottom and saturating at the top, which is why the paper keeps the operating point in a narrow window.

iDAC. Binary-weighted NMOS sinks, unit device 1 µm/4 µm, 400 nA reference into a 10-unit diode (40 nA LSB), every one of the 255 unit devices with its own mismatch, 40 chips. Full scale is 10.06 µA. Median worst-case DNL is 0.60 LSB (90th percentile 1.03), INL 0.46 LSB (0.77), and full scale changes by 4.0 % when the output node moves from 0.4 to 0.8 V. The paper's post-layout corners (DNL < 0.25, INL < 0.4 LSB) do not include random mismatch, which explains most of the difference.

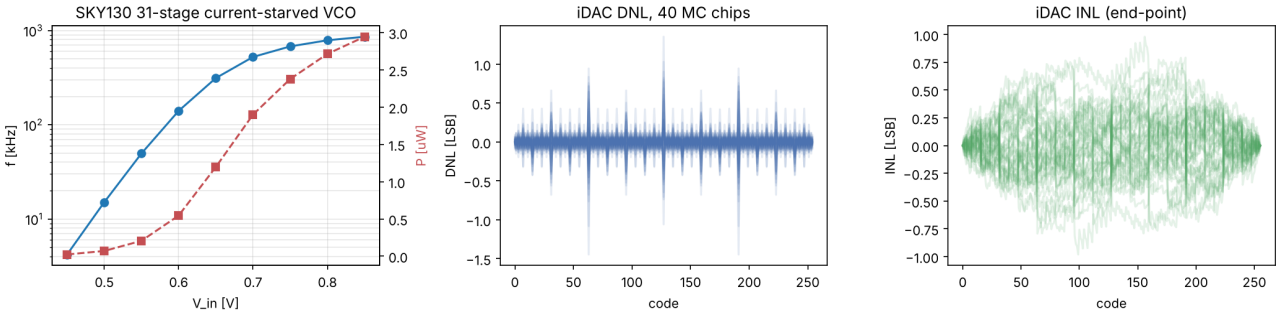

Figure 2: SKY130 ring VCO $f(V)$ and power (left); iDAC DNL and INL over 40 Monte Carlo chips (centre, right).

4.2 Degenerated V-to-I plus CCO (idea 7)

Fig. 3 shows the alternative front end. The node voltage drives an NMOS with a 300 kΩ source resistor, so its drain current is close to $(V_{in} - V_{GS})/R_s$ once $g_m R_s \gg 1$. A PMOS diode and mirror turn that current into the bias of both the PMOS and NMOS starving devices of the same 31-stage ring, which then runs at a frequency close to proportional to the current. Because the V-to-I needs headroom, this version runs at 1.8 V; the comparison is made on the shape of $f(V)$ over the same 0.4 V span.

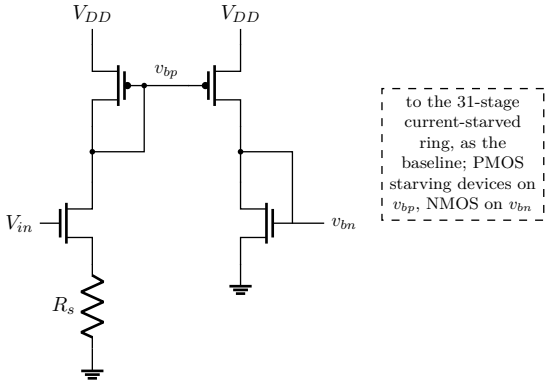

Figure 3: Idea 7 in SKY130: resistor-degenerated V-to-I (left) biasing the starving devices of every ring stage through a PMOS/NMOS mirror. The baseline VCO instead drives the starving devices directly from V_{in}.

Result. Fig. 4: the CCO's worst deviation from a straight line is 1.8 % of its frequency span against 14.2 % for the baseline VCO. The price is range and power: its frequency spans 140 to 527 kHz (a 3.8:1 ratio against 204:1 for the VCO), so it never runs as slowly, and the V-to-I and mirror branches draw static current. Its temperature drift is 0.50 %/°C at the bottom of the window and 0.01 %/°C at the top, where the resistor sets the current (an ideal resistor here; a real poly resistor adds its own coefficient).

4.3 VCO temperature drift (idea 9)

The same baseline VCO was simulated at 17, 27, 37 and 47 °C, the range a wearable sees between room and skin. Its frequency drifts by 0.83 to 1.87 % per °C depending on the input voltage (Fig. 4, right). A calibration done once at power-up is therefore stale after the device warms on the skin.

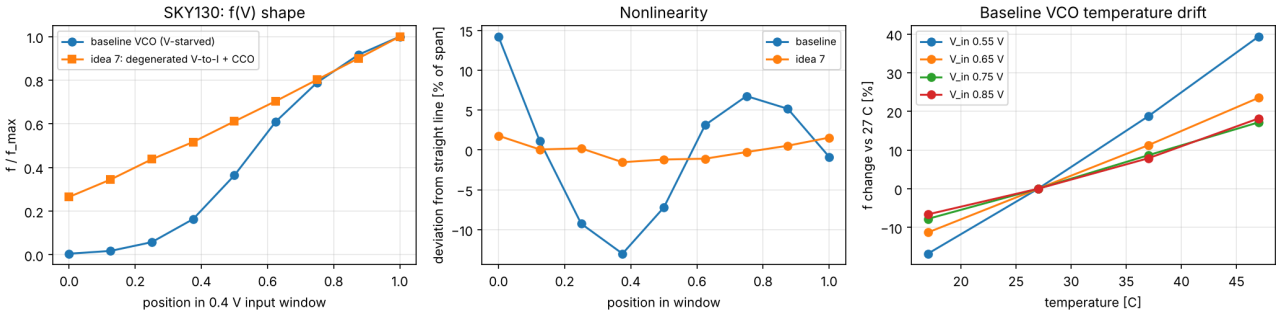

Figure 4: SKY130: $f(V)$ shape of the baseline VCO and the idea-7 CCO over a 0.4 V window (left), their deviation from a straight line (centre), and the baseline VCO's temperature drift (right).

5 Baseline Reproduction

GSR. With a narrow window (0.57 V to 0.63 V) the paper's linear conversion is accurate (0.11 % RMS) but the CPU wakes 26 times per hour to re-centre the current. Widening the window to save wake-ups breaks the linear assumption: 7.7 % error at 0.48 V to 0.72 V (Table 1).

Impedance. The two-measurement method gives 4.65 % $|Z|$ error and 3.59 deg phase error in 1 s on a 75.1 kΩ, -21.8 deg load (Table 3). Its weakness is that amplitude comes only from the RMS of an unsynchronised stream, and the two captures assume the tissue does not change between them.

Table 1: GSR: error and CPU wake-ups vs. the allowed VCO window, baseline linear conversion vs. idea 1.

Allowed window [V]	baseline error [%]	baseline wake-ups/h	idea 1 error [%]
0.57 to 0.63	0.11	26	0.089
0.55 to 0.65	0.54	16	0.089
0.52 to 0.68	2.52	10	0.092
0.48 to 0.72	7.73	8	0.083
0.45 to 0.75	18.16	2	0.096

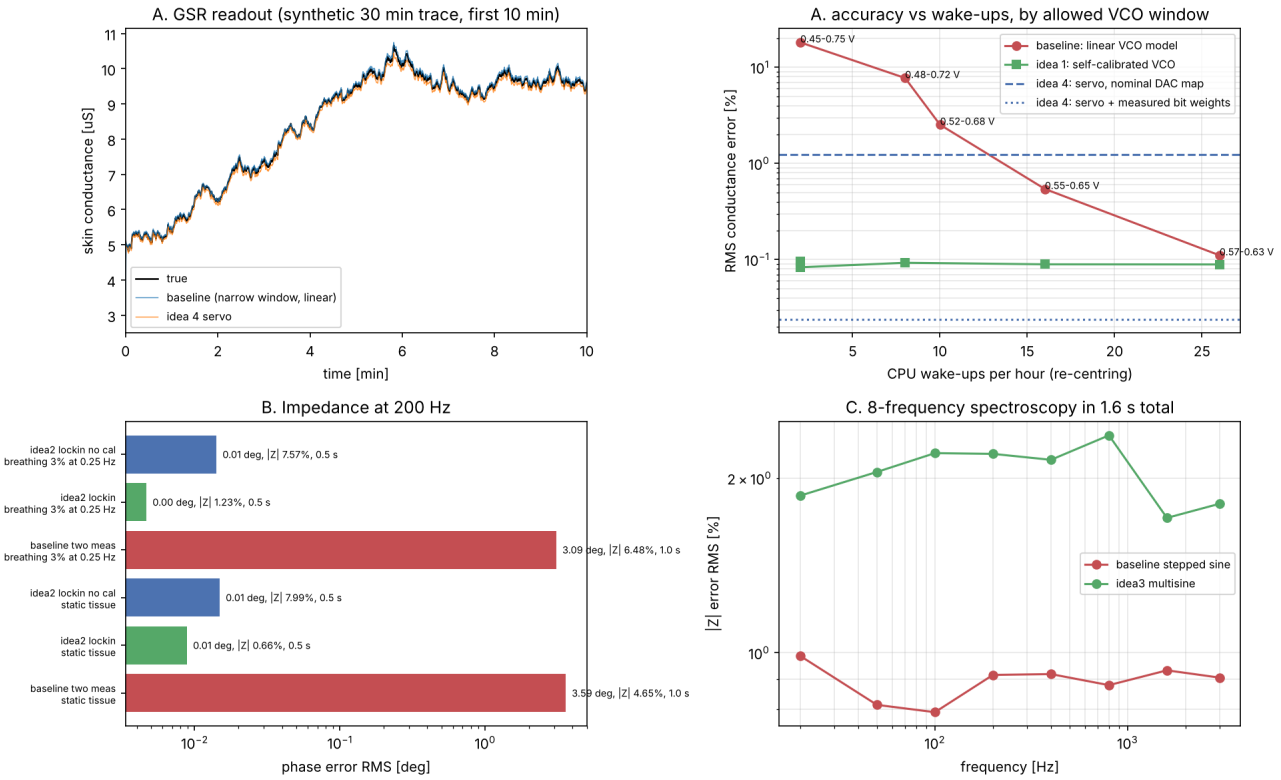

Figure 5: Round-1 results: GSR readout and the accuracy vs. wake-up trade-off (top); impedance phase error by method and multisine vs. stepped sine (bottom).

6 Proposed Extensions and Results

Table 2 summarises the ten ideas. Ideas 1 to 5 were tested in round 1, ideas 7 to 10 are new; idea 6 is not simulated.

Table 2: Summary of the extensions.

#	Idea	Result	Verdict
1	VCO self-calibration via iDAC and R_{ref}	0.08 % GSR error at 2 wake-ups/h vs. 26/h	**win**
2	synchronous lock-in, one capture	phase 0.009 vs. 3.59 deg, $\|Z\|$ 0.66 vs. 4.65 %, half the time	**win**
3	multisine spectroscopy	2.15 % vs. 0.92 % for stepped sine (median tone)	**no win**
4	impedance servo (delta-sigma on the code)	VCO held within 3.1 mV, 6.3 vs. 10.5 µW; 1.24 % error, 0.024 % with bit weights	**win**
5	counter-domain events + power gating	64 to 22.5 µW (15.8 with servo), arithmetic on Table I	**partial**
6	classifier sets the injection current	not simulated	**not simulated**
7	degenerated V-to-I + CCO	1.8 % vs. 14.2 % nonlinearity; linear-firmware GSR error 0.20 % vs. 2.68 %	**win**
8	swap tissue and R_{ref} between channels	lock-in $\|Z\|$ 0.66 % to 0.04 %; stepped sine 0.91 % to 0.05 %	**win**
9	background drift calibration	GSR error 7.21 % to 0.36 % at 0.33 % duty cycle	**win**
10	binary excitation (2 iDAC codes)	0.87 % (0.37 % with swap) vs. 0.91 % stepped, 0.05 % stepped + swap	**partial**

6.1 Idea 1: VCO self-calibration through R_{ref}

Motivation. The narrow window exists only because the VCO is nonlinear. If the curve were known, the whole range could be used.

Method. At start-up the CPU sweeps the iDAC through R_{ref} (16 codes, 50 ms each), records counts per second, and stores a monotone lookup table from $\log f$ to voltage. No extra hardware: the calibration source is the chip's own iDAC and resistor.

Result. Table 1: about 0.08 % error for every window, so a wide window can be used and wake-ups fall to 2 per hour.

Catch. The table is labelled with the current the firmware believes it applied, so iDAC errors enter it (Sec. 6.7); it also drifts with temperature (Sec. 6.8).

6.2 Idea 2: synchronous lock-in in one capture

Motivation. The paper needs two captures only because the counter and the iDAC are not synchronised.

Method. The counters are sampled on the same timer that updates the iDAC, so every sample time is known relative to the injected sine. Both channels are demodulated against that sine and $Z = R_{ref} X_t / X_r$ is taken as a complex ratio in one capture. Both channels are linearised with idea 1.

Result. Table 3: phase error 0.009 deg against 3.59 deg, $|Z|$ error 0.66 % against 4.65 %, in half the time. With 3 % breathing-like tissue change it stays at 0.005 deg, while the two-measurement method gives 3.09 deg. Without idea 1 the lock-in $|Z|$ error is 8.0 %: the two ideas need each other.

Catch. It needs a timer trigger from the iDAC clock to the counter sampling, a small digital change.

6.3 Idea 3: multisine spectroscopy (negative result)

Eight tones from 20 to 3000 Hz in one 1.6 s capture instead of stepping. With the peak current fixed, each tone gets only a fraction of the amplitude while the iDAC's mismatch distortion stays, so the median error is 2.15 % against 0.92 % for the stepped sine (Table 7). Its only benefit would be time alignment of all frequencies.

Table 3: Impedance at 200 Hz: paper method vs. idea 2 (12 random chip pairs).

Tissue	Method	time [s]	$\|Z\|$ error [%]	phase error [deg]
static tissue	two measurements (paper)	1.0	4.65	3.591
static tissue	synchronous lock-in (idea 2)	0.5	0.66	0.009
static tissue	lock-in, no VCO calibration	0.5	7.99	0.015
breathing 3% at 0.25 Hz	two measurements (paper)	1.0	6.48	3.093
breathing 3% at 0.25 Hz	synchronous lock-in (idea 2)	0.5	1.23	0.005
breathing 3% at 0.25 Hz	lock-in, no VCO calibration	0.5	7.57	0.014

6.4 Idea 4: impedance servo

Method. An integral loop moves the iDAC code so that the VCO always sits at one frequency; a first-order delta-sigma on the code dithers between neighbouring codes so the average current resolves below one LSB. The conductance is read from the average code, not from the VCO.

Result. The VCO input stays within 3.1 mV, so its nonlinearity no longer matters, and it can sit at a low, cheap point (6.3 instead of 10.5 µW). With the nominal 40 nA per code the error is 1.24 %, set by iDAC bit mismatch; measuring the 8 bit weights once brings it to 0.024 %.

6.5 Idea 5: counter-domain events and power gating

The digital back end is 46 of 72 µW, 21 of it leakage. If the level-crossing test runs in a small always-on block next to the counter and the core is power-gated between events, Table 4 follows. This is arithmetic on the paper's Table I under stated assumptions (5 ms awake per event, 10 % retention leakage, 2 µW always-on block), not a simulation.

Table 4: Idea 5: GSR power estimate.

Configuration	GSR power [µW]
paper, Table I	64.0
idea 5 gating, baseline window	22.5
idea 5 gating + idea 1	22.5
idea 5 gating + idea 4 servo	15.8

6.6 Idea 7 (new): degenerated V-to-I plus CCO

Motivation. Ideas 1 and 4 work around the VCO's nonlinearity in firmware. Idea 7 removes most of it in the circuit, so the paper's simple linear conversion becomes valid over a wide window.

Method. The SKY130 front end of Sec. 4.2. The system test uses the paper's firmware unchanged: linear conversion between the window ends, no lookup table.

Result. Table 5: with a 0.55 to 0.65 V window the baseline VCO with linear firmware has 2.68 % error and the CCO 0.20 %; at 0.45 to 0.75 V the errors are 10.9 % and 3.32 %. The CCO is therefore much better, but its remaining 1.8 % bow still needs idea 1's table for sub-0.1 % accuracy over a wide window.

Catch. The CCO never runs as slowly as the VCO, so with oscillator power proportional to frequency it costs about 1.7× the oscillator power at mid-window, plus the static V-to-I current. Idea 1 gives similar accuracy in firmware for free; idea 7 is the choice when firmware tables are not wanted.

Table 5: Idea 7: GSR with the paper's linear firmware, baseline VCO vs. CCO (no lookup table in either).

Window [V]	VCO error [%]	VCO wake-ups/h	CCO error [%]	CCO wake-ups/h
0.55 to 0.65	2.68	16	0.20	16
0.48 to 0.72	5.12	2	2.46	2
0.45 to 0.75	10.89	2	3.32	2
0.42 to 0.78	18.63	0	3.81	0

6.7 Idea 8 (new): swapping the two channels

Motivation. The ratio X_t/X_r cancels everything common to the two channels, but not the difference between them: iDAC 1 and iDAC 2 have different gains.

Method. Halfway through the capture, two analog switches exchange which (iDAC + VCO) channel serves the tissue and which serves R_{ref}. With $q_1 = g_A Z/(g_B R_{ref})$ and $q_2 = g_B Z/(g_A R_{ref})$, the geometric mean $\sqrt{q_1 q_2} = Z/R_{ref}$ cancels the channel gains exactly.

Result. For stepped-sine spectroscopy the error falls from 0.91 % to at most 0.06 % at every tone from 200 to 3000 Hz (Table 7); the low tones stay limited by VCO phase noise, which rises at low frequency. At one frequency (Table 6) the improvement is from 0.66 % to 0.04 % when the lookup tables are labelled with measured currents; with tables labelled with the nominal 40 nA per code it is only 1.11 % to 0.84 %, because each table then carries its own iDAC's nonlinearity at two different operating points. Swap and bit-weight calibration (idea 4) together are needed.

Catch. The switches must sit outside the current path (Kelvin connection), or their on-resistance adds to the measurement.

Table 6: Idea 8 at 200 Hz, 0.5 s, 12 chip pairs.

LUT labelled with	Method	$\lvert Z\rvert$ error [%]	phase error [deg]
measured currents	lock-in	0.66	0.009
measured currents	lock-in + swap (idea 8)	0.04	0.018
nominal 40 nA/code	lock-in	1.11	0.010
nominal 40 nA/code	lock-in + swap (idea 8)	0.84	0.018

6.8 Idea 9 (new): background calibration against temperature drift

Motivation. Fig. 4 shows the VCO drifting by 0.83 to 1.87 %/°C, and a wearable warms by several degrees after it is put on.

Method. The SKY130 drift is applied to the GSR model with a temperature profile that starts at 27 °C, rises by 8 °C in five minutes and then wanders by ±1 °C. Every 30 s the firmware measures one or two known points through R_{ref} (50 ms each) and corrects the lookup table: one point rescales f, two points correct gain and slope of $\log f$.

Result. The start-up table alone gives 7.21 % GSR error. One point every 30 s brings it to 1.19 %; checking more often does not help (1.24 % every 10 s), because the drift is not a pure gain: it is larger at low input voltage (Fig. 4). Two points every 30 s correct gain and slope of $\log f$ and give 0.36 %, at a 0.33 % duty cycle.

Catch. The two calibration points briefly take the VCO away from the tissue; with two channels, one channel can calibrate while the other measures.

6.9 Idea 10 (new): binary excitation (partial)

Motivation. Idea 3 failed because a multi-level waveform exposes the iDAC's mismatch. A two-level waveform uses only two codes, so a DAC is linear by construction, and it can use the full current swing.

Method. Two binary signals with the same peak current: the sign of the multisine (a binary multisine) and a 511-chip maximum-length sequence (MLS).

Result. Table 7 (median over tones): the binary multisine gives 0.87 %, slightly better than the stepped sine (0.91 %) and far better than the multisine (2.10 %), and 0.37 % with swapping. The MLS spreads its power over 255 bins and is noise-limited (2.48 %). But the stepped sine with swapping (0.05 %) is better still: the large square swings excite the VCO's residual nonlinearity, and intermodulation products land on some tones (the 200 Hz error stays even with an ideal iDAC). Binary excitation is worth it only when all frequencies must be captured at the same instant, and would pair best with the linear CCO of idea 7.

Table 7: Spectroscopy: $|Z|$ error RMS [%] per tone, all methods 1.6 s total and the same peak current; last column: distinct iDAC codes used.

Method	20	50	100	200	400	800	1600	3000 Hz	codes
stepped sine (paper flow)	0.99	0.81	0.79	0.92	0.92	0.88	0.93	0.91	81
stepped sine + swap (8)	1.06	0.73	0.26	0.01	0.02	0.06	0.04	0.01	81
multisine (3)	1.87	2.05	2.21	2.20	2.15	2.37	1.71	1.81	80
binary multisine (10)	1.19	0.84	0.86	2.07	0.83	0.88	0.85	1.42	2
binary multisine + swap (8+10)	1.06	0.06	0.44	2.09	0.29	0.09	0.03	0.95	2
MLS (10)	0.87	0.90	0.93	3.28	3.27	3.15	2.23	2.74	2

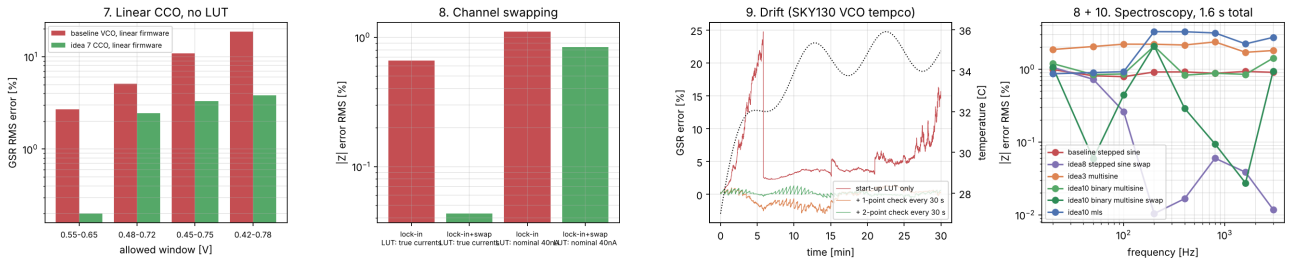

Figure 6: Round-2 results: (7) GSR with linear firmware, VCO vs. CCO; (8) channel swap at 200 Hz; (9) drift with and without background calibration; (8 + 10) spectroscopy by method.

7 Further Ideas Not Yet Simulated

- **Idea 6, a classifier sets the injection current**: a tiny on-chip classifier on the GSR stream predicts when a phasic response is coming and raises the current (and resolution) just before it.
- **Electrode-contact monitoring with a pilot tone** (ambitious): a second, high-frequency lock-in channel on the same capture tracks the electrode contact impedance and flags motion artefacts in real time.
- **Lock-in plus servo** (ambitious): run the servo of idea 4 on the AC amplitude rather than DC, so the VCO sees only a tiny residual and the impedance is read from the code stream.

8 Conclusion

The HEEPidermis BioZ chain was rebuilt at block level on transistor-level SKY130 VCO and iDAC models with mismatch, and ten extensions were tested under the same conditions.

- **Phase in one capture.** Synchronising the counter to the iDAC timer turns the two-measurement solve into a lock-in, with far better phase accuracy and robustness to tissue change.
- **Nonlinearity can be handled three ways**: a self-calibrated table (idea 1), a servo that never leaves one point (idea 4), or a linear CCO front end (idea 7).
- **Channel mismatch and drift can be cancelled** by swapping channels (idea 8) and by a short background check against R_{ref} (idea 9).
- **Simultaneous multi-frequency capture did not pay off** in this model: the multisine loses to stepping, and binary excitation beats stepping only until swapping is added; the report shows why.

Acknowledgments. The architecture and all reported numbers of the original design are from Sapriza *et al.* [1]. Any error in the rebuild is mine.

A Limitations

- **Process.** SKY130 typical corner, local mismatch only; VCO shapes are mapped onto the paper's range; the CCO runs at 1.8 V.
- **Tissue and signals.** Cole model with assumed values; synthetic GSR trace.
- **Capture details** (counter sampling rate, fine-phase use) are not in the paper and are assumptions here.
- **Power** for idea 5 is arithmetic on the paper's Table I, not a simulation.

B Reproducing the Results

Step	Command (in `demos/Atienza`)
SKY130 models + mismatch hook	`bash ../common/setup_sky130.sh`
VCO sweep and iDAC Monte Carlo	`python3 spice/vco_idac_sky130.py` (about 6 min on 4 cores)
CCO and VCO temperature	`python3 spice/new_circuits_sky130.py`
Round-1 and round-2 experiments	`python3 run_experiments.py`; `python3 run_new_ideas.py`
This report	`cd report && python3 make_tex.py && latexmk -pdf main.tex`

References

[1] J. Sapriza *et al.*, "HEEPidermis: a versatile SoC for BioZ recording," in *Proc. IEEE LASCAS*, 2026, doi:10.1109/LASCAS67804.2026.11457136.

[2] M. J. M. Pelgrom, A. C. J. Duinmaijer and A. P. G. Welbers, "Matching properties of MOS transistors," *IEEE JSSC*, vol. 24, no. 5, 1989.

[3] SkyWater Technology and Google, "SkyWater SKY130 open source PDK," `https://github.com/google/skywater-pdk`.

[4] H. Vogt *et al.*, "Ngspice user's manual," version 42, 2024.