A Fully On-Chip, Label-Free Reservoir + Delta-Sigma CIM Classifier

Two-page summary of a simulation study

Nithin Purushothama

nithinpuru.com/dsm-cim (live model of the paper's design and the proposal)

What I propose. Move everything the classifier of Gupta *et al.* [1] does off-chip, or per chip with labels, onto the chip itself, and use the circuit's own mismatch rather than fight it.

1. **P4, SRAM power-up input weights**: the ±1 input weights are the power-up states of an SRAM array, enrolled at three temperatures (0.013 % bit flips). **Nothing is stored or loaded.**
2. **P9, bitstream input layer**: each ECG sample becomes a 16-bit delta-sigma bitstream, XNORed with the weight bits and charge-shared into each neuron. **No multipliers and no off-chip MAC.**
3. **P7 + P13, label-free readout**: the CIM weights are trained once on a nominal twin. Each chip normalises its 30 features with the mean and spread it measures on unlabelled beats at its operating temperature. **No labelled data per chip.**
4. **P12, reservoir fingerprint**: eight stored beats are the challenge and the 30 neuron responses are the answer. **100 % of 8 chips identified** from -40 to 85 °C, with no extra circuit.

Why. The paper computes the input layer off-chip, keeps the random weights off-chip, and trains the readout for each chip with labelled data and that chip in the loop at 27 °C. My transistor-level SKY130 Monte Carlo of the neuron shows the amplifier trip point moving -26 / +28 mV and the comparator -34 / +37 mV between -40 and 85 °C. A readout frozen at 27 °C then drops to 72.0 % for an unlucky input-weight draw.

Table 1: The paper's design against the proposal, in the same model (30 SKY130 Monte Carlo neurons, ECG200, 8 chips × 10 train/test splits). Simulation only, nothing is measured.

Metric	Paper's design (this model)	**Proposed**	By
Accuracy at -40 / 27 / 85 °C [%]	78.0 / 79.0 / 78.7	**77.1 / 77.5 / 77.0**	all
Labelled beats needed per chip	the training set, chip in the loop	**0**	P7+P13
Off-chip work per reservoir step	30 × 32 analog MAC	**none**	P9
Input weights stored or loaded	30 × 32, off-chip	**0 bits**	P4
Worst of 6 weight draws, -40 / 85 °C [%]	72.7 / 72.0	**79.2 / 78.8**	P7+P13
Chip identification, -40 to 85 °C	not available	**100 %** (1.2 against 10.5 mV)	P12

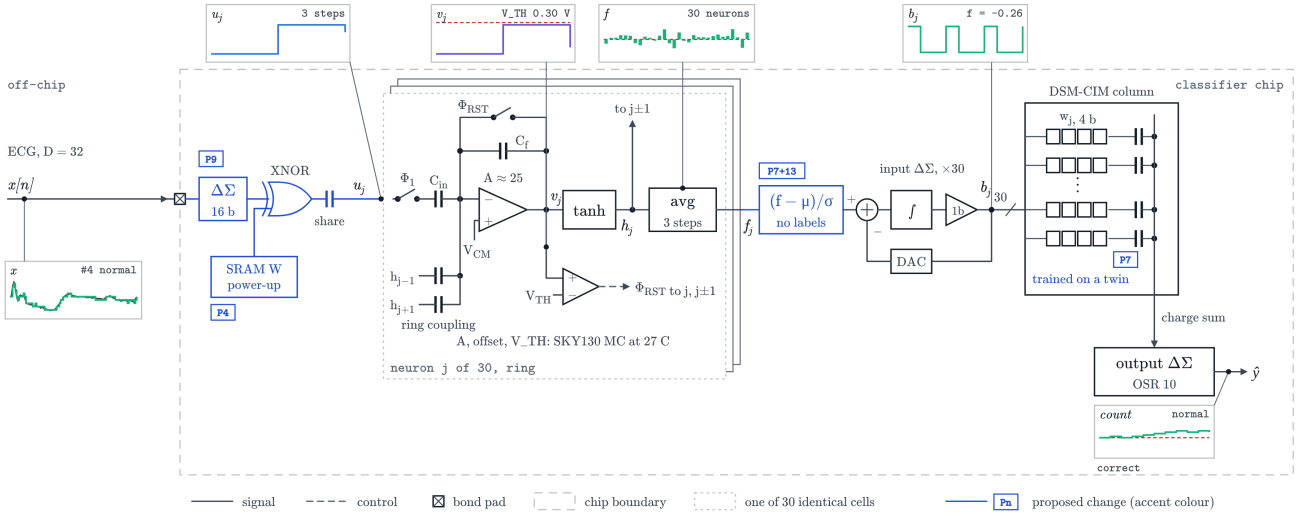

Figure 1: The proposed classifier, as drawn on the web page; changes in blue. One neuron of the 30 is drawn in full. The insets trace one ECG beat through this circuit on one simulated chip: input, neuron input and state, the 30 features, one feature's bitstream and the output count.

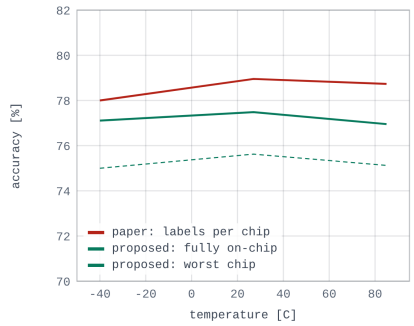

(a) Accuracy against temperature: the paper with labels per chip, the fully on-chip design (mean and worst chip).

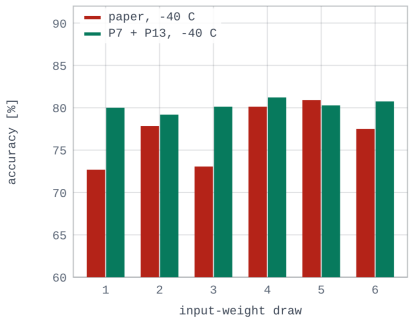

(b) At -40 °C for six input-weight draws: the paper's 27 °C readout against statistics refreshed at temperature.

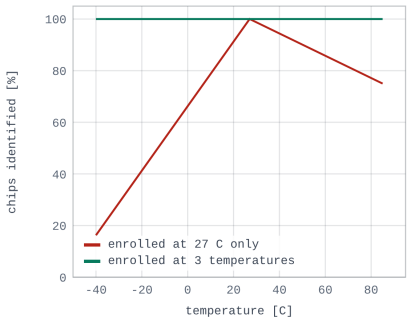

(c) Fingerprint: chips identified, enrolment at 27 °C only (16 % at -40 °C) against three temperatures.

Figure 2: The evidence. The fully on-chip design is within 1.8 points of the paper while removing labels, the off-chip MAC and stored weights, and is 7 points better in the worst case.

How the model was built and checked. The system is rebuilt at block level: input layer, 30 switched-capacitor leaky-integrator neurons with ring coupling and threshold reset, an input delta-sigma modulator per feature, and a CIM column with 4-bit weights followed by an output delta-sigma modulator (OSR 10). Each neuron's amplifier gain and offset and its comparator threshold come from a SKY130 Monte Carlo at -40, 0, 27, 50 and 85 °C, and the SRAM power-up skews from a SKY130 cell Monte Carlo. The browser model uses the Python train/test splits and is checked against the Python model. Thirteen proposals in total; two did not help (a delta-sigma neuron and a multi-timescale reservoir on ECG200) and two are concepts only, all reported on the web page.

Limits. Simulation only, on one dataset (ECG200, three reservoir steps per beat); SKY130 is not the paper's process, and the CIM column is behavioural.

What I would do next. Run the label-free readout and the fingerprint on the group's chip and on longer sequences (WESAD), where the reservoir has more history to work with.

References

[1] T. Gupta, V. Damodaran, Y. Liao, J.-s. Seo and A. Sanyal, "Delta-sigma modulator-based compute-in-memory neural network with analog feature extraction and classification for edge sensors," in *Proc. IEEE ISCAS*, 2026, doi:10.1109/ISCAS66217.2026.11562729.